MAYTONI
DECORATIVE LIGHTING

Instruction

O580WL-L6B

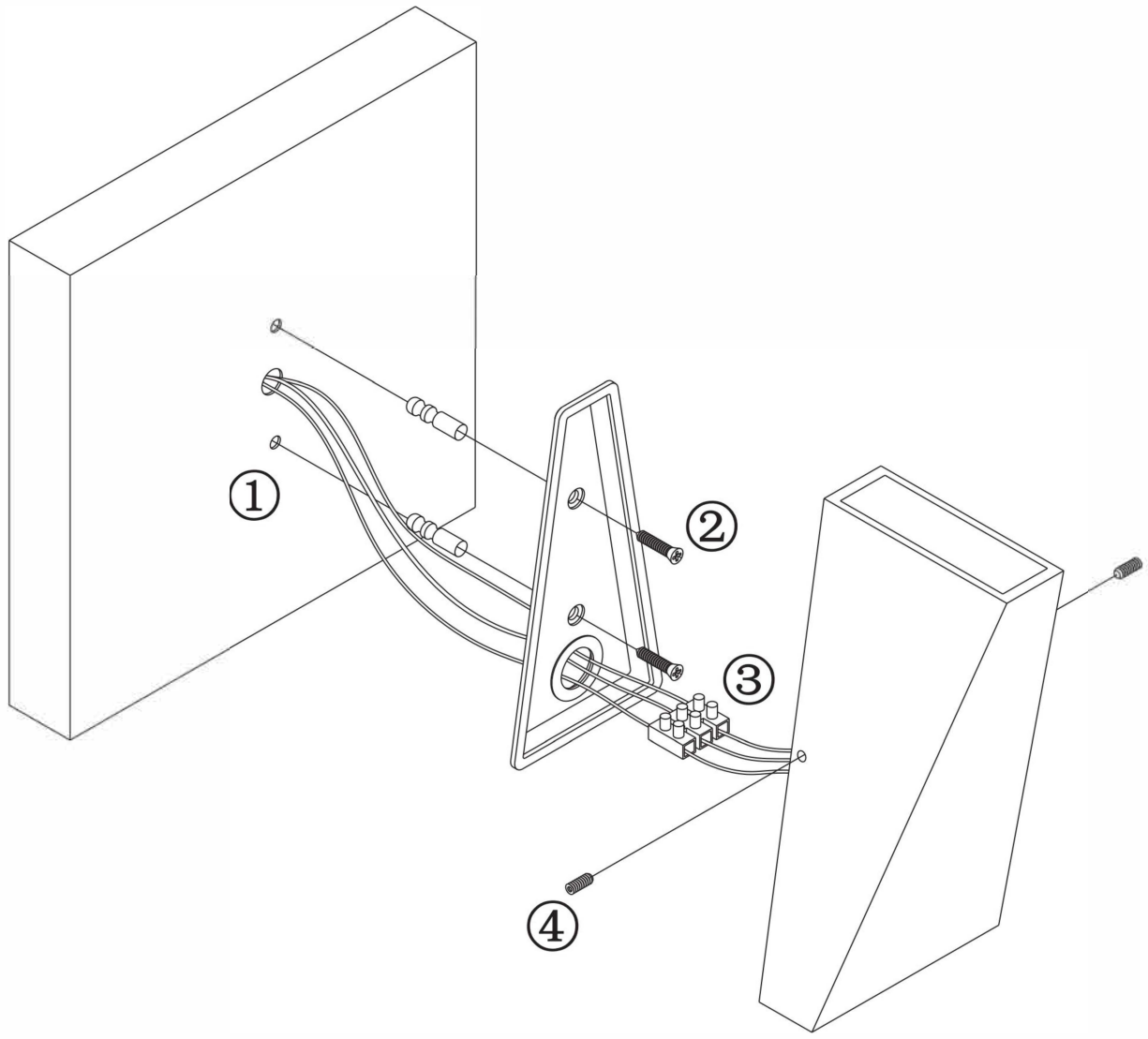

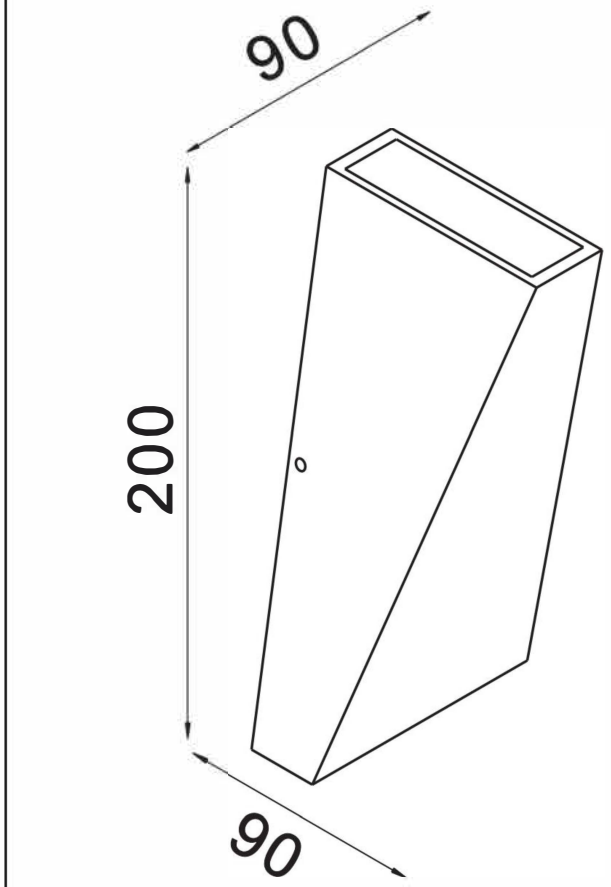

LED

MAX 6W
100 Lumen

Model: O580WL-L6B
Collection: Outdoor
Times Square
Recessed

This product contains a light source of the energy efficiency class G