MAYTONI
DECORATIVE LIGHTING

Instruction

MOD374PL-L28W3K

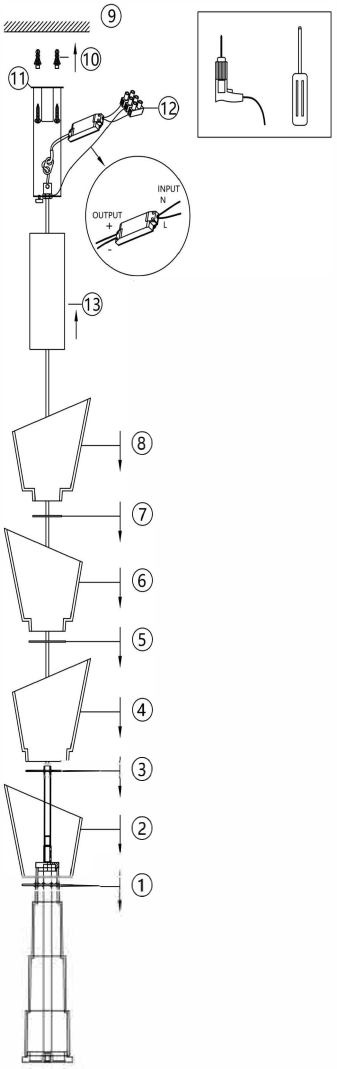

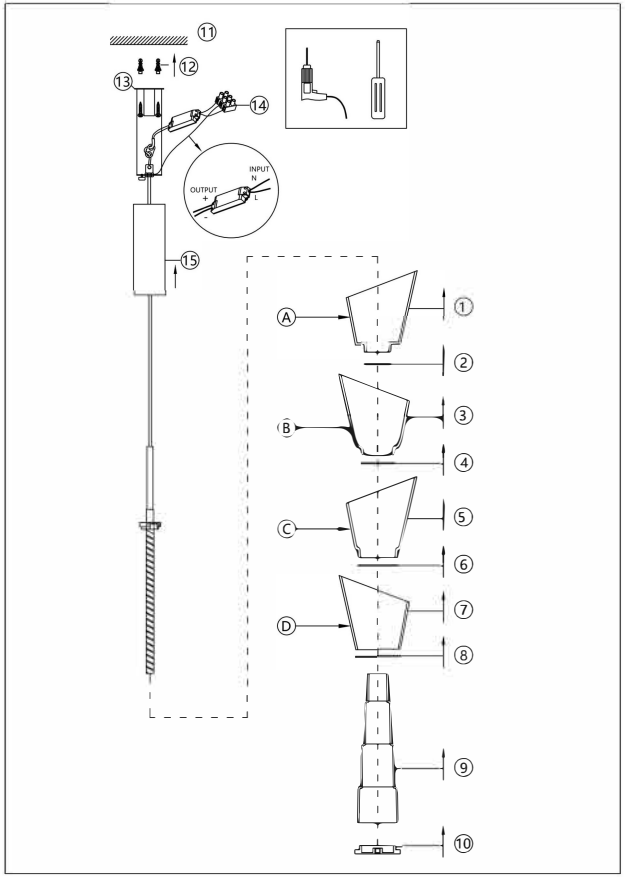

LED

MAX 14W
2 000 Lumen

Model: MOD374PL-L28W3K
Collection: Modern
Series: Seoul
Pendant Lamps

This product contains a light source of the energy efficiency class D