MAYTONI
DECORATIVE LIGHTING

Instruction

MOD085PL-16BS

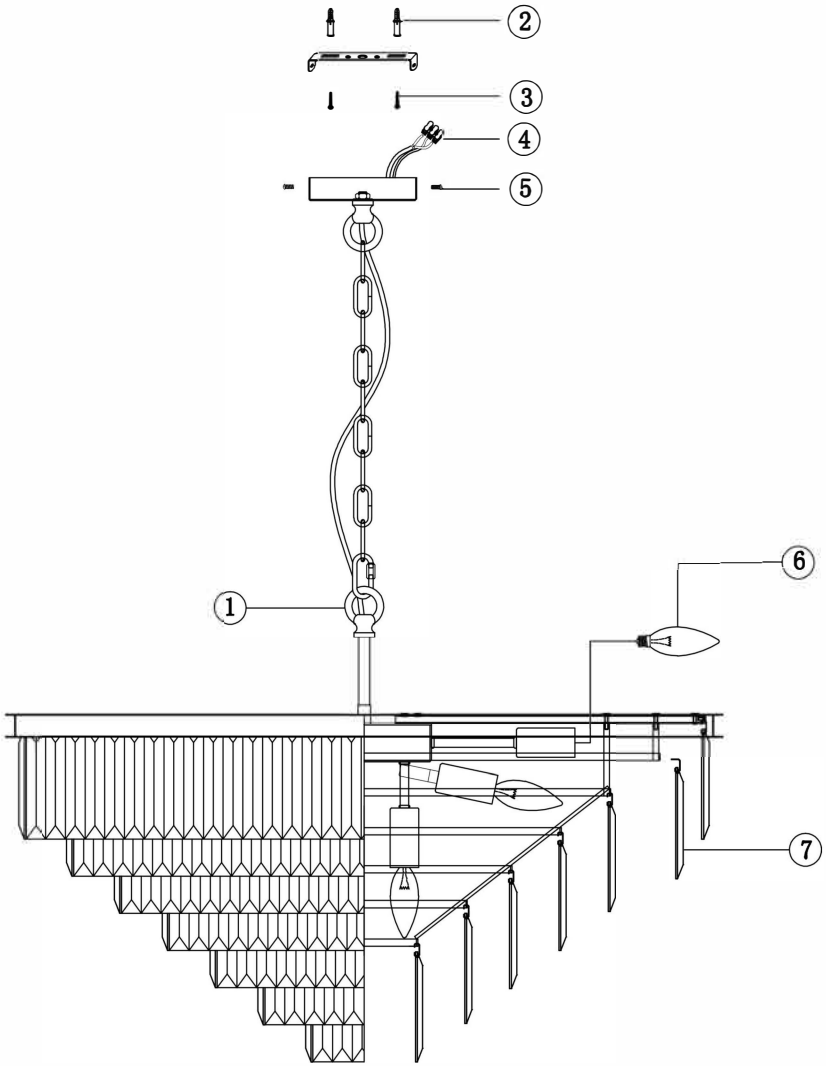

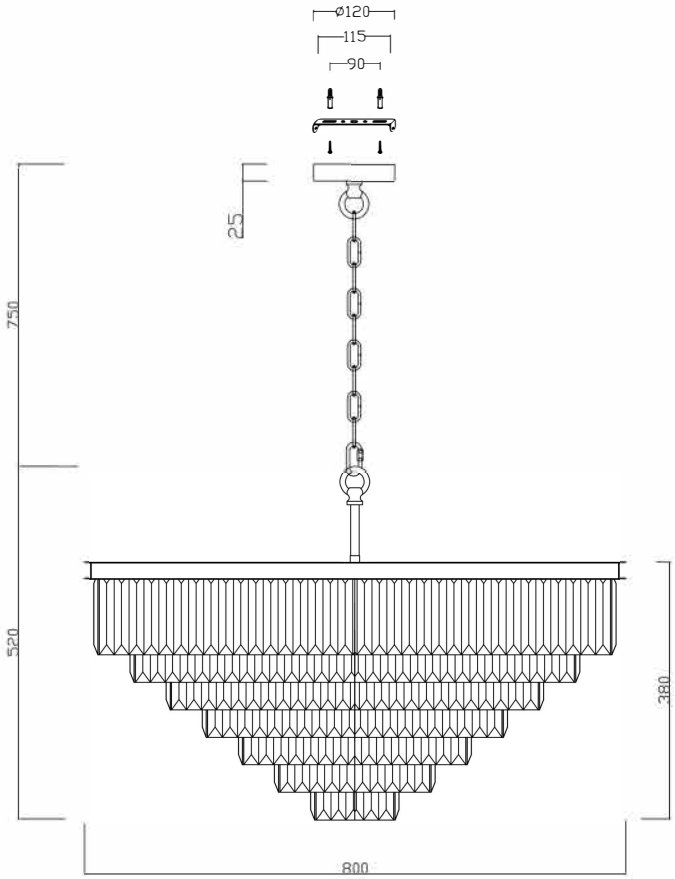

16xE14 40W

Model: MOD085PL-16BS
Collection: Neoclassic
Series: Revero
Pendant Lamps