MAYTONI
DECORATIVE LIGHTING

Instruction

MOD256WL-L5B3K

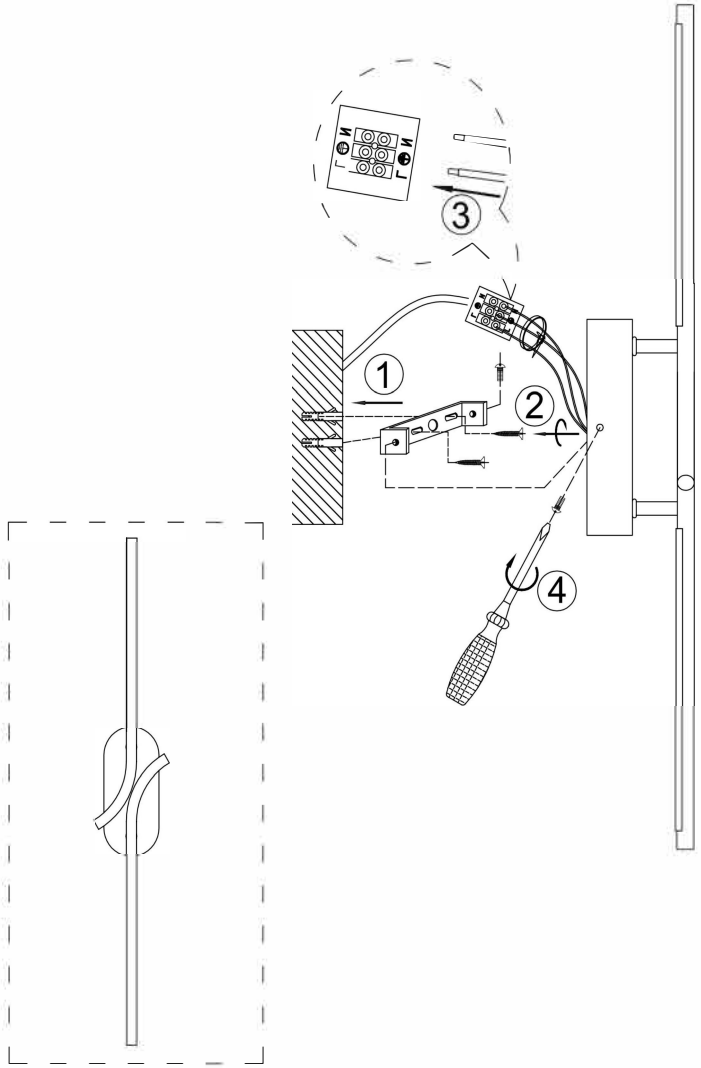

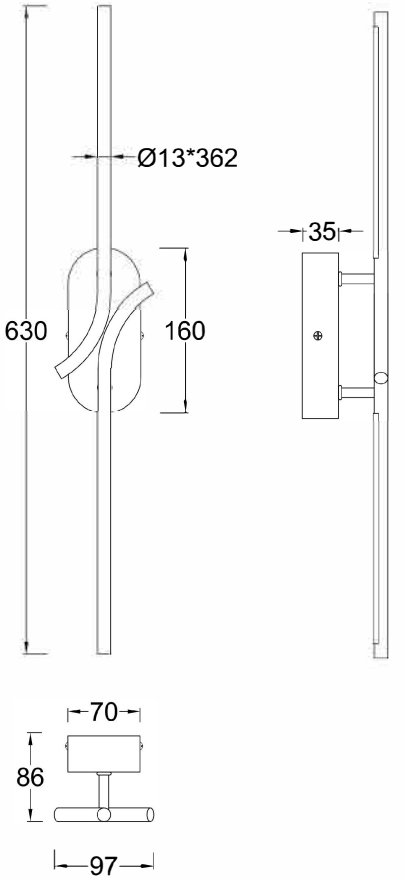

LED

MAX 6W
170 Lumen

Model: MOD256WL-L5B3K
Collection: Modern
Series: Renaissance
Wall Lamps

This product contains a light source of the energy efficiency class B