MAYTONI
DECORATIVE LIGHTING

Instruction

MOD473WL-L20BSK

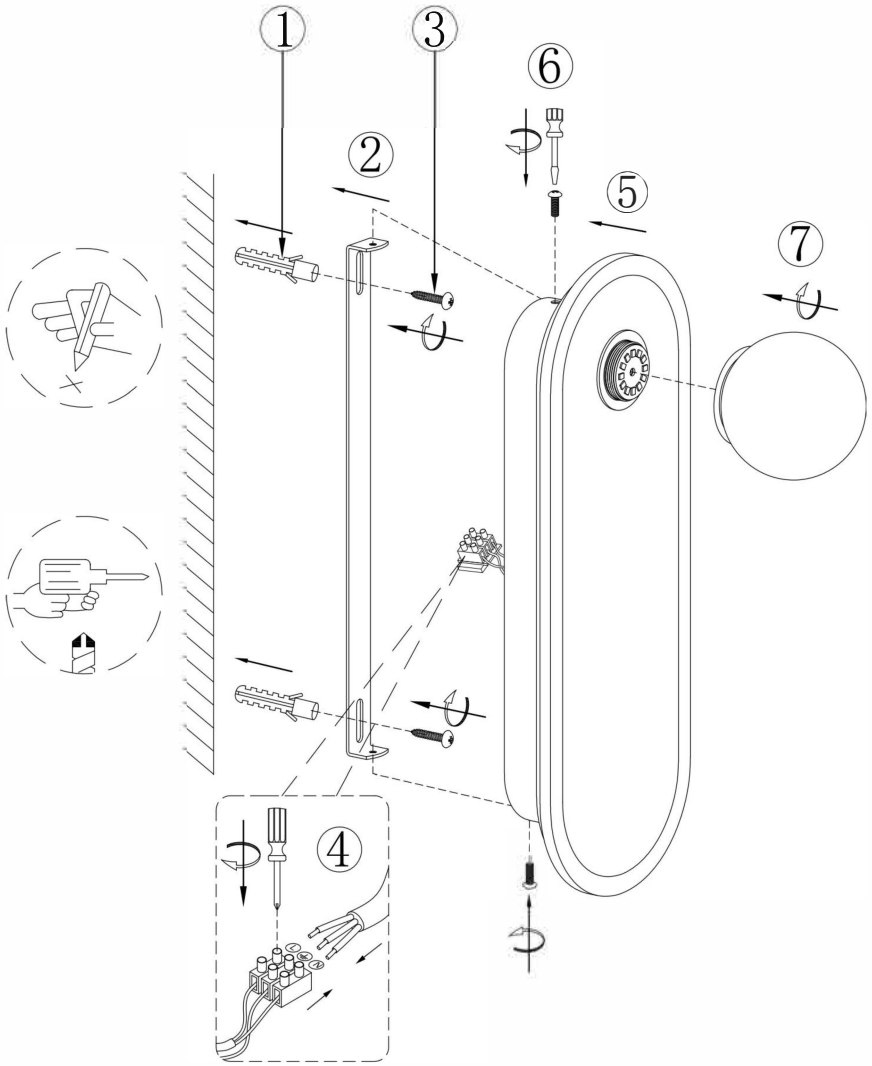

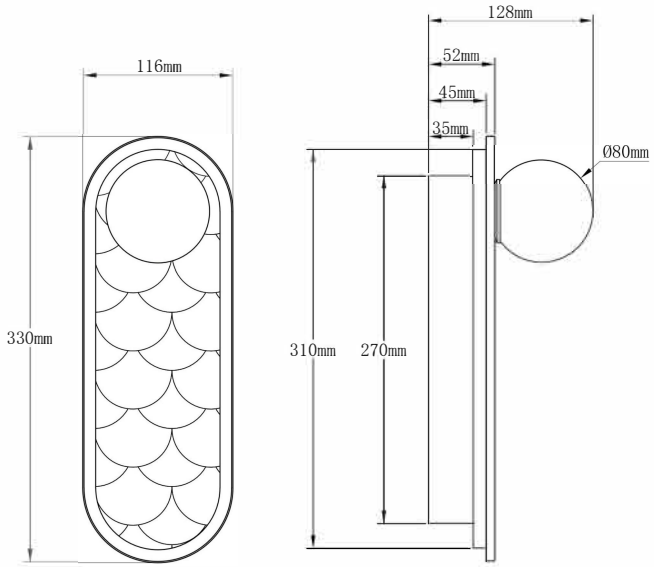

LED

MAX 20W
1182, 1368, 1296 Lumen

Model: MOD473WL-L20BSK
Collection: Modern
Series: Perlamour
Wall Lamps

This product contains a light source of the energy efficiency class G