MAYTONI
DECORATIVE LIGHTING

Instruction

MOD473WL-L25BSK

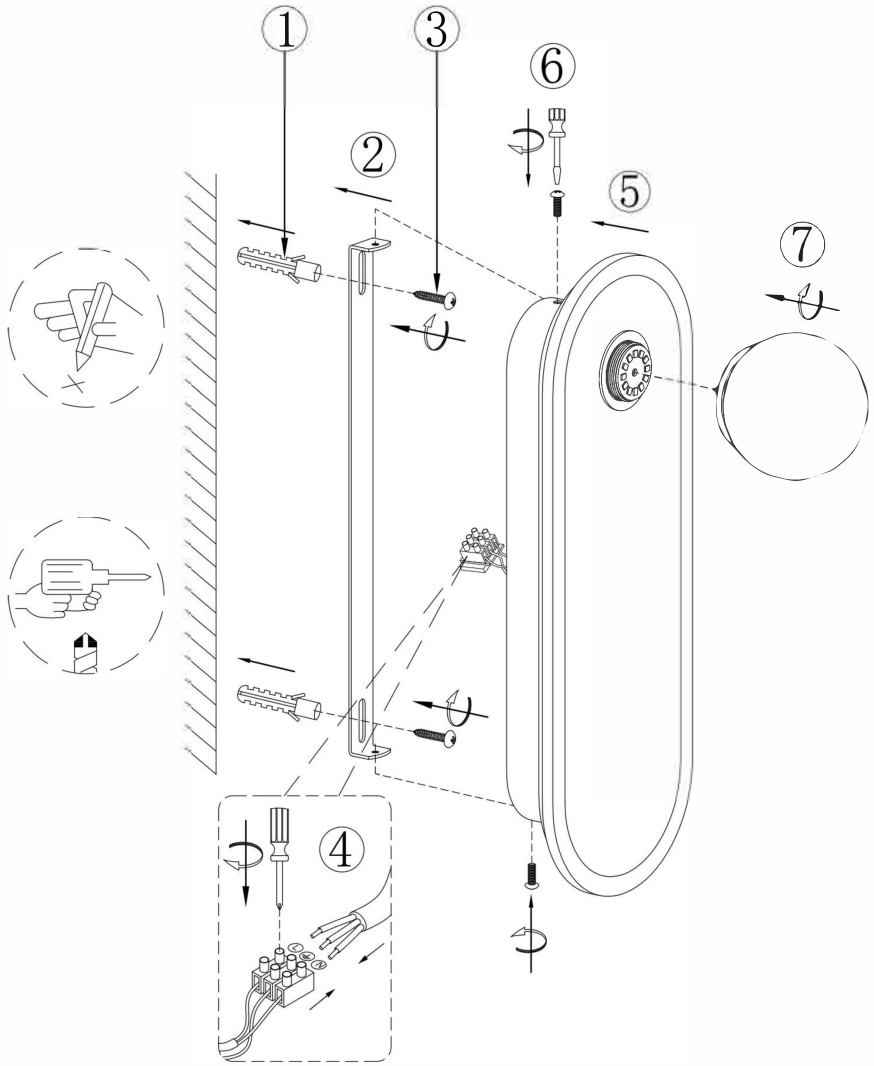

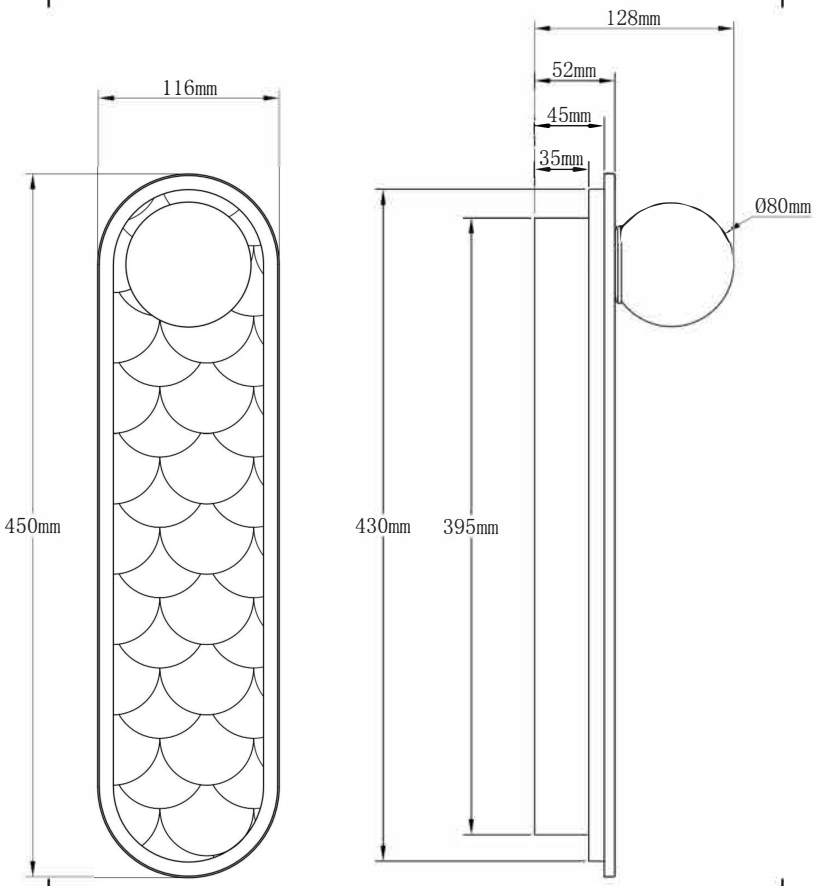

LED

MAX 25W
1496, 1727, 1611 Lumen

Model: MOD473WL-L25BSK
Collection: Modern
Series: Perlamour
Wall Lamps

This product contains a light source of the energy efficiency class G