MAYTONI
DECORATIVE LIGHTING

Instruction

MOD497PL-L23BRK

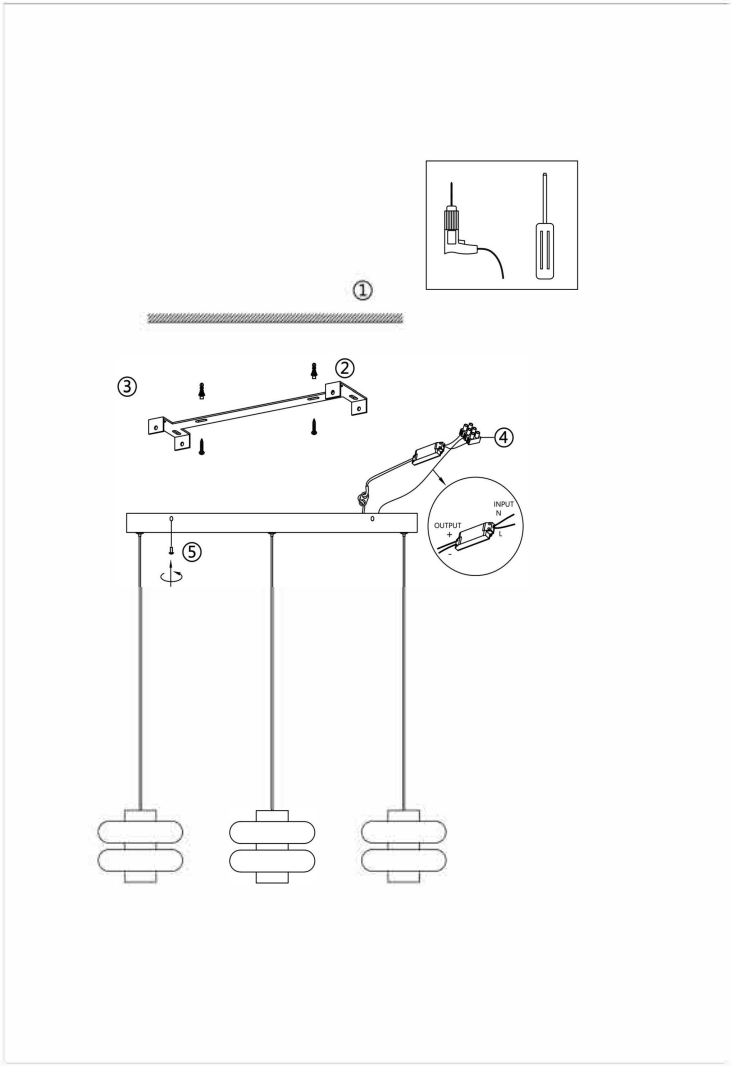

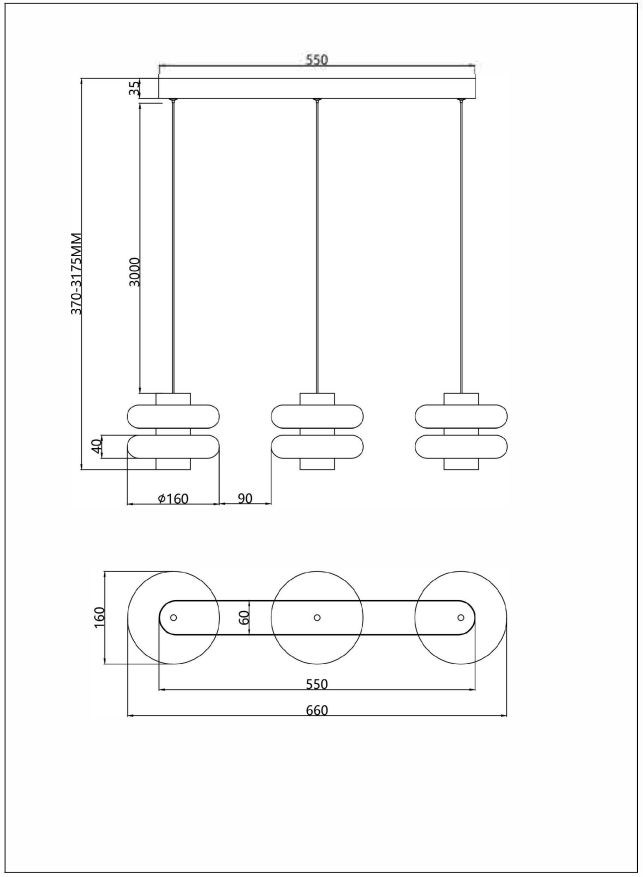

LED

MAX 23W
2 450 Lumen

Model: MOD497PL-L23BRK
Collection: Modern
Series: Nuvem
Pendant Lamps

This product contains a light source of the energy efficiency class E