MAYTONI
DECORATIVE LIGHTING

Instruction

MOD279WL-L14G3K

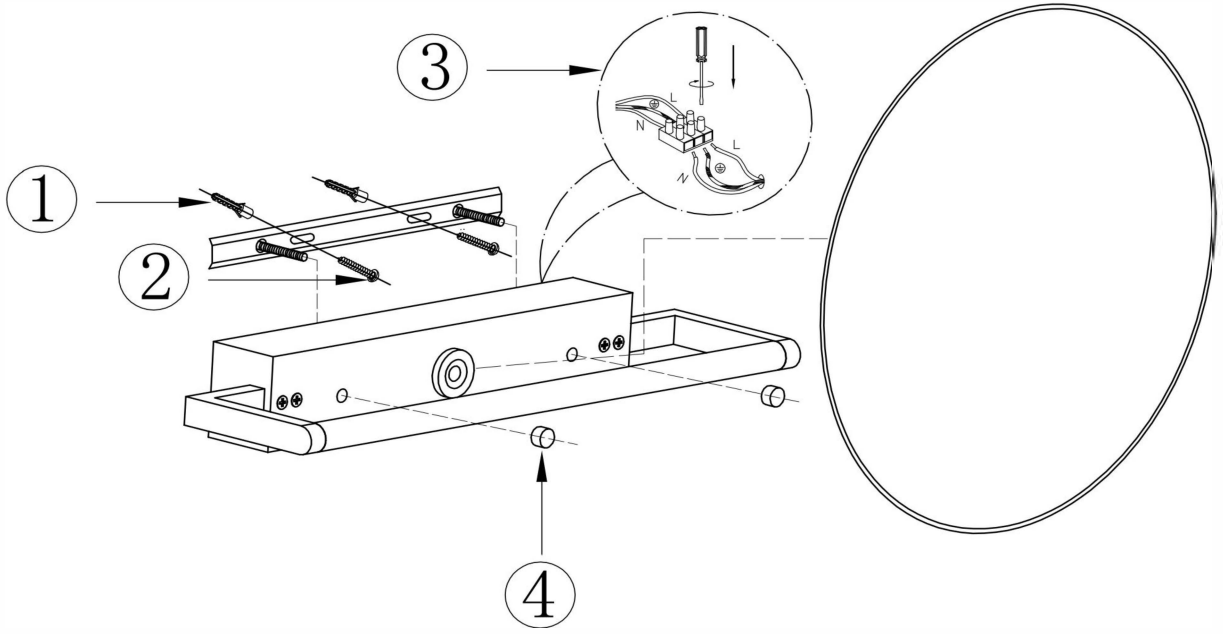

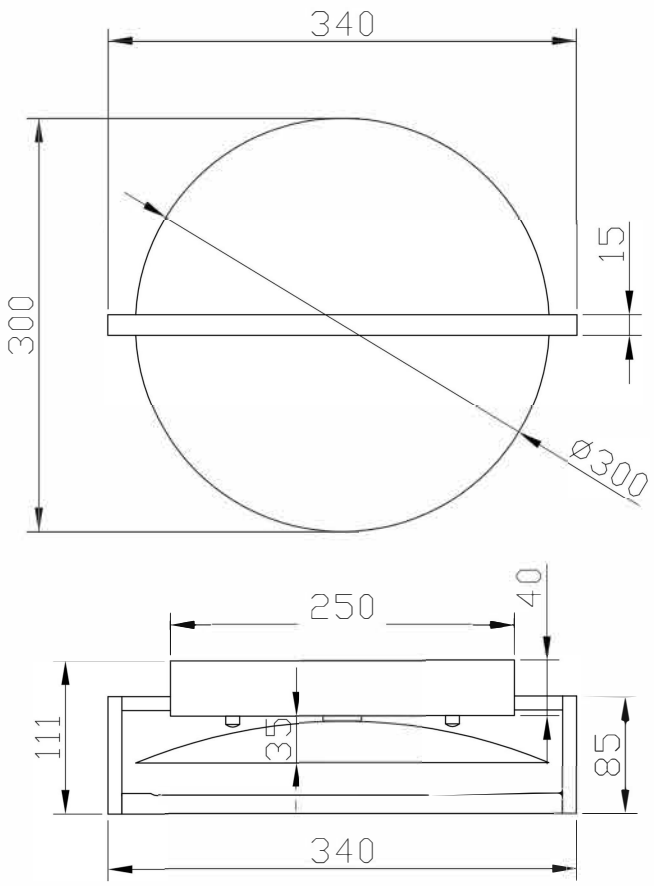

LED

MAX 14W
300 Lumen

Model: MOD279WL-L14G3K
Collection: Modern
Series: Mira
Wall Lamps

This product contains a light source of the energy efficiency class G