MAYTONI
DECORATIVE LIGHTING

Instruction

MOD320WL-L6BS3K1

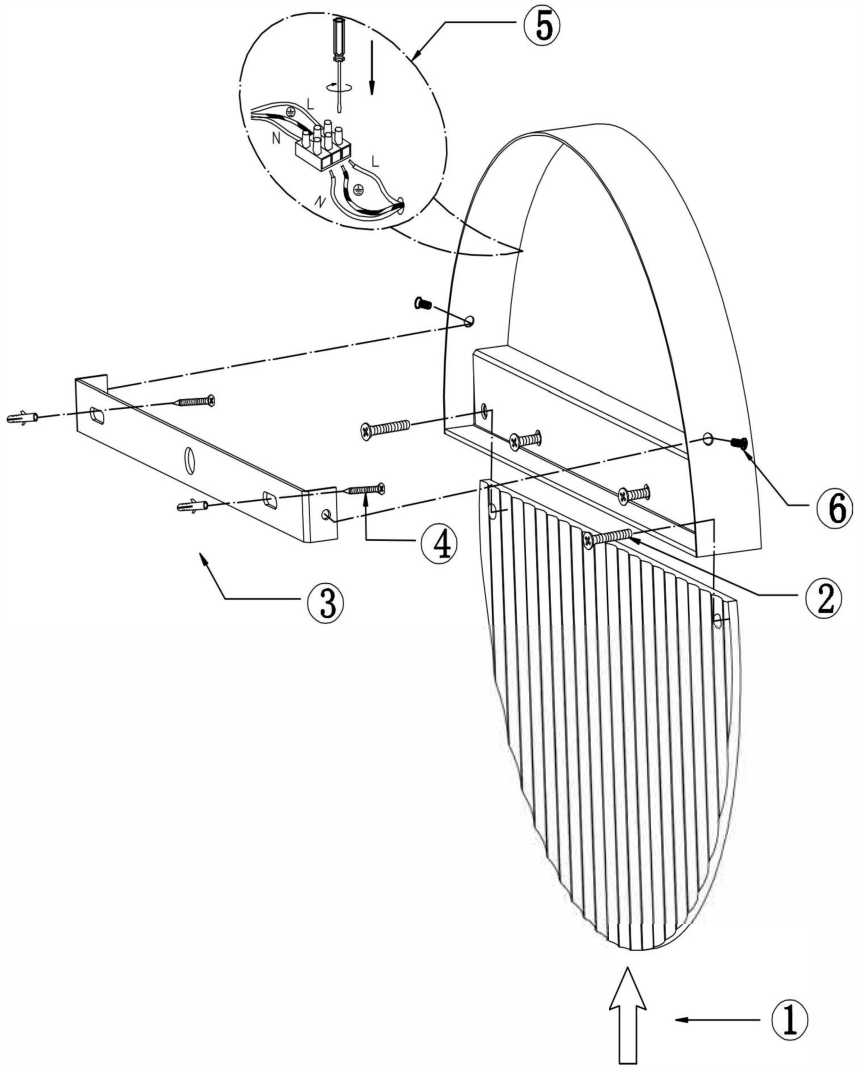

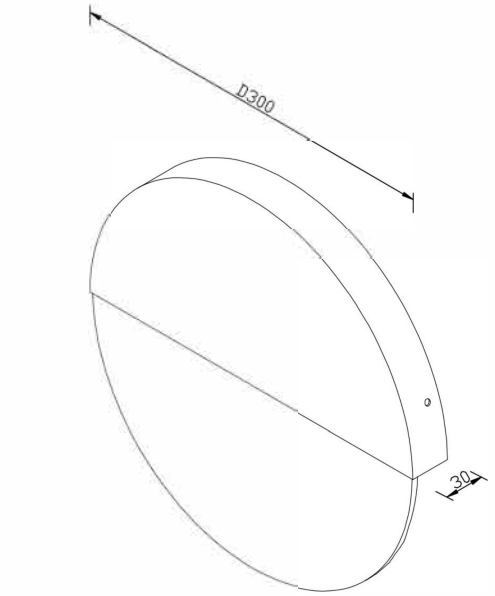

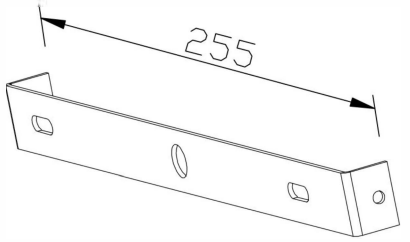

LED

MAX 6W
200 Lumen

Model: MOD320WL-L6BS3K1
Collection: Modern
Series: Jupiter
Wall Lamps