MAYTONI
DECORATIVE LIGHTING

Instruction

MOD089PL-08BS

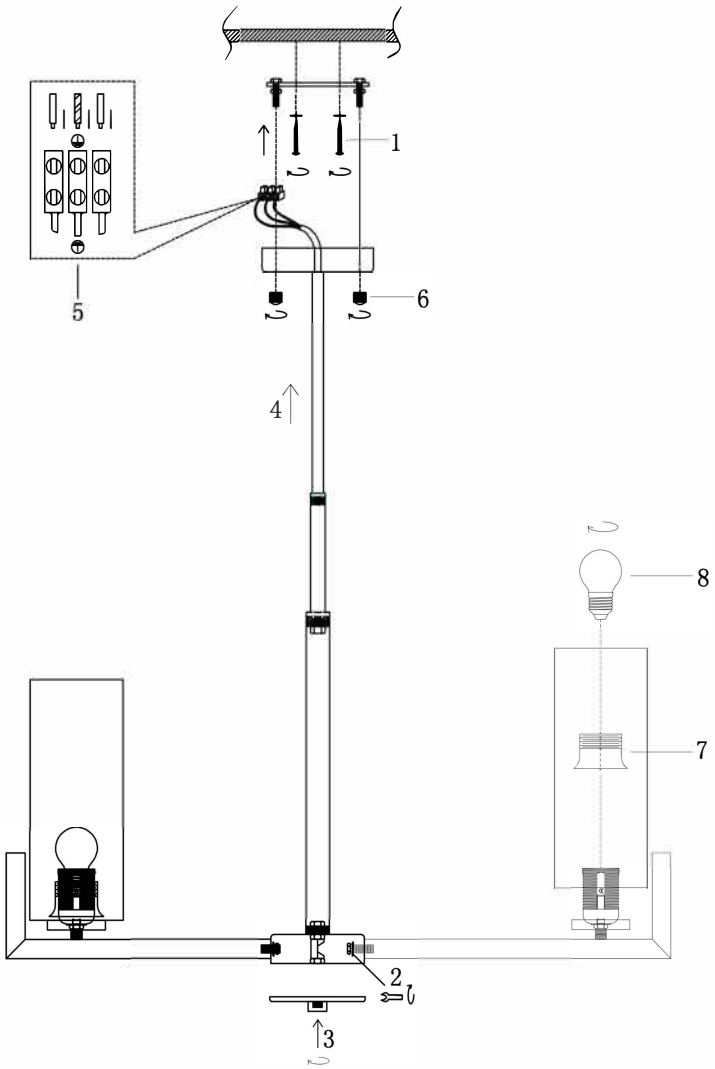

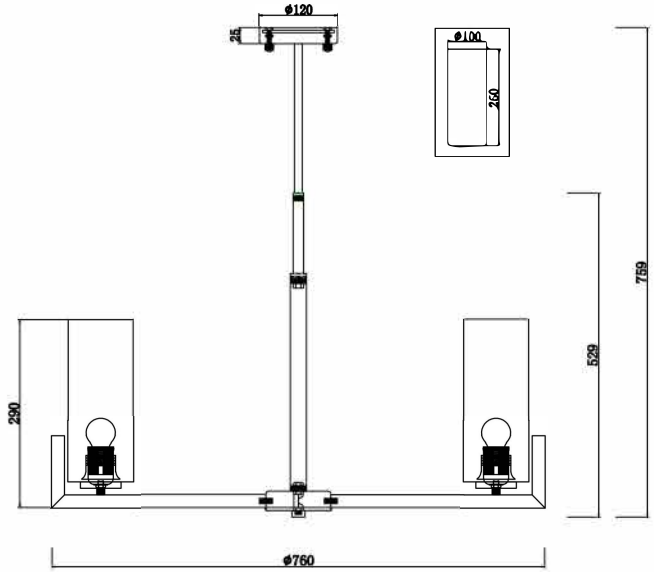

8xE27 40W

Model: MOD089PL-08BS
Collection: Modern
Series: Fortano
Pendant Lamps