MAYTONI
DECORATIVE LIGHTING

Instruction

MOD296WL-L6BS3K

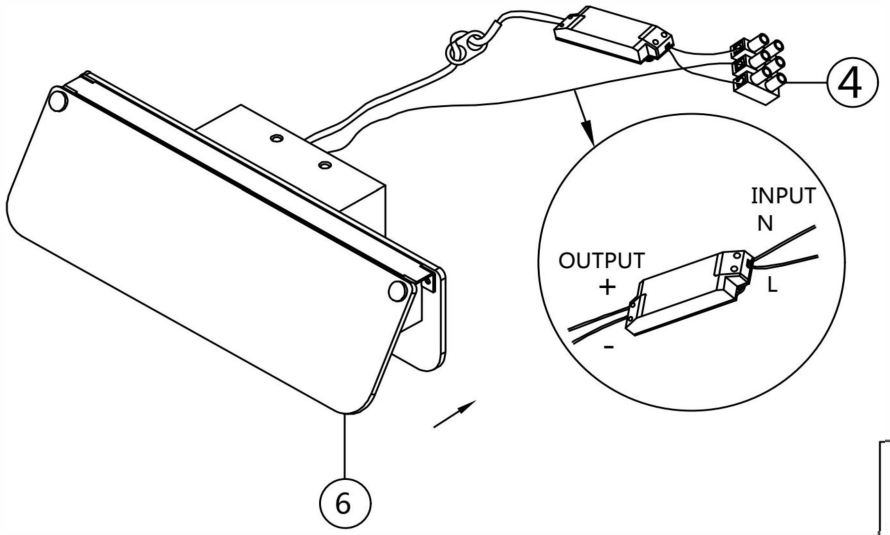

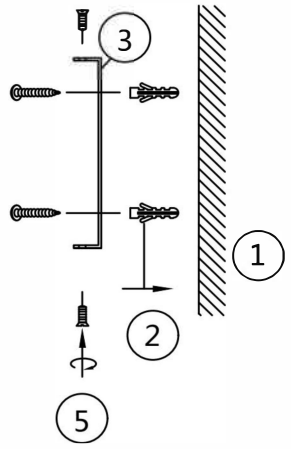

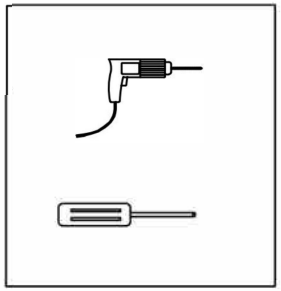

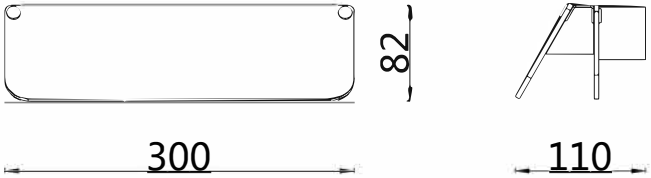

LED

MAX 6W
730 Lumen

Model: MOD296WL-L6BS3K
Collection: Modern
Series: Flat
Wall Lamps

This product contains a light source of the energy efficiency class D