MAYTONI
DECORATIVE LIGHTING

Instruction

MOD296PL-L20BC3K

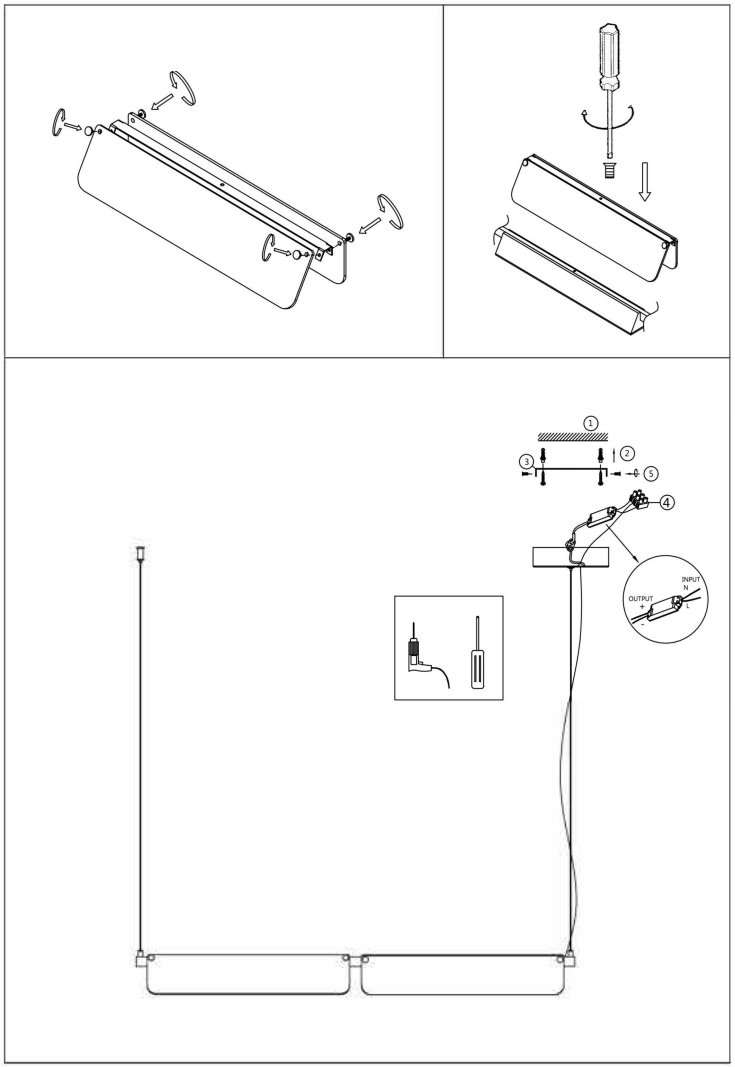

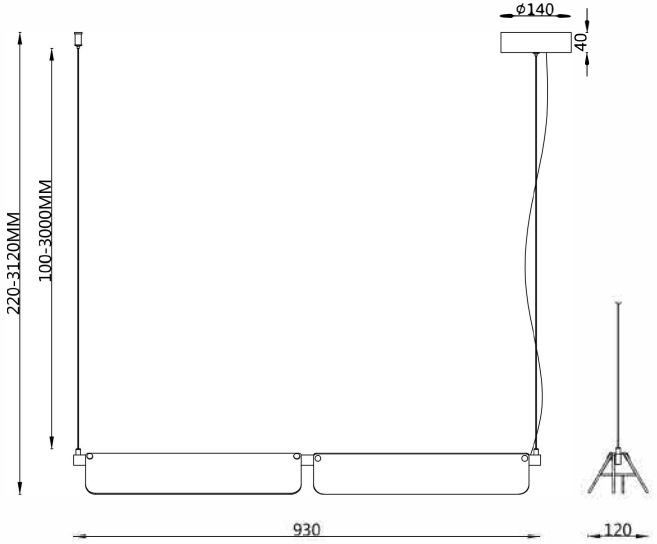

LED

MAX 20W
2 480 Lumen

Model: MOD296PL-L20BC3K
Collection: Modern
Series: Flat
Pendant Lamps

This product contains a light source of the energy efficiency class D