MAYTONI
DECORATIVE LIGHTING

Instruction

DIA200PL-08G

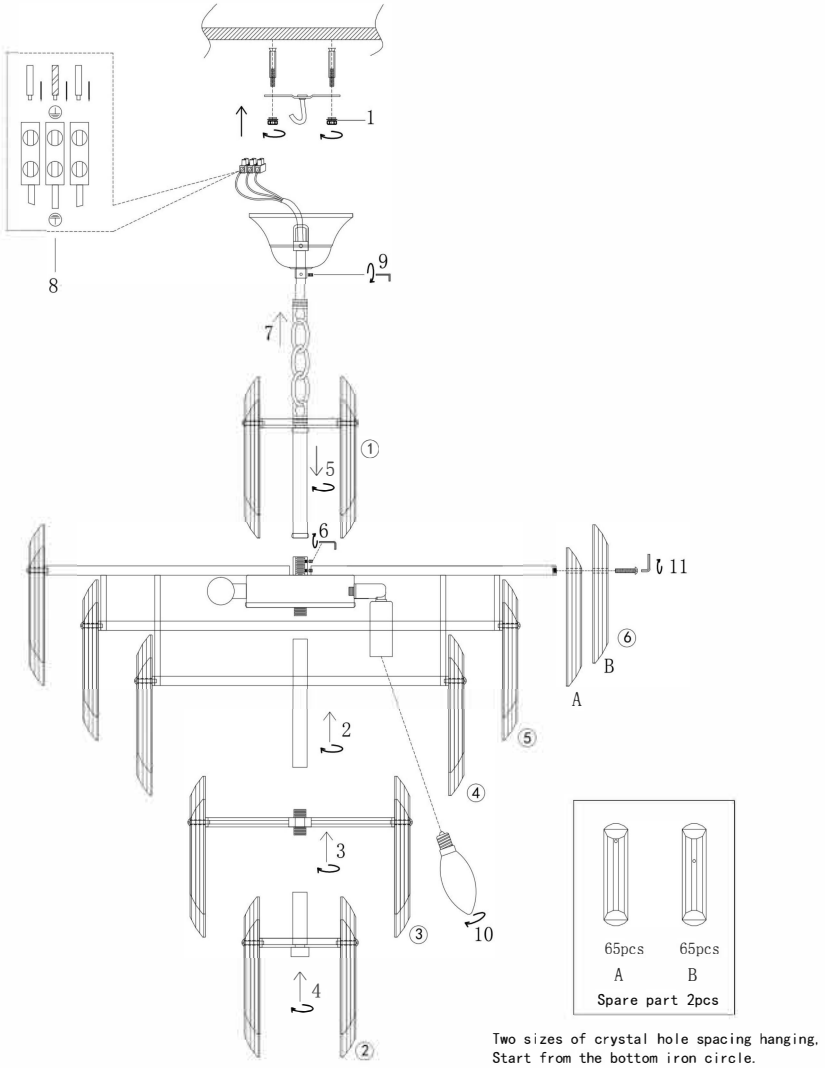

Two sizes of crystal hole spacing hanging.
Start from the bottom iron circle.

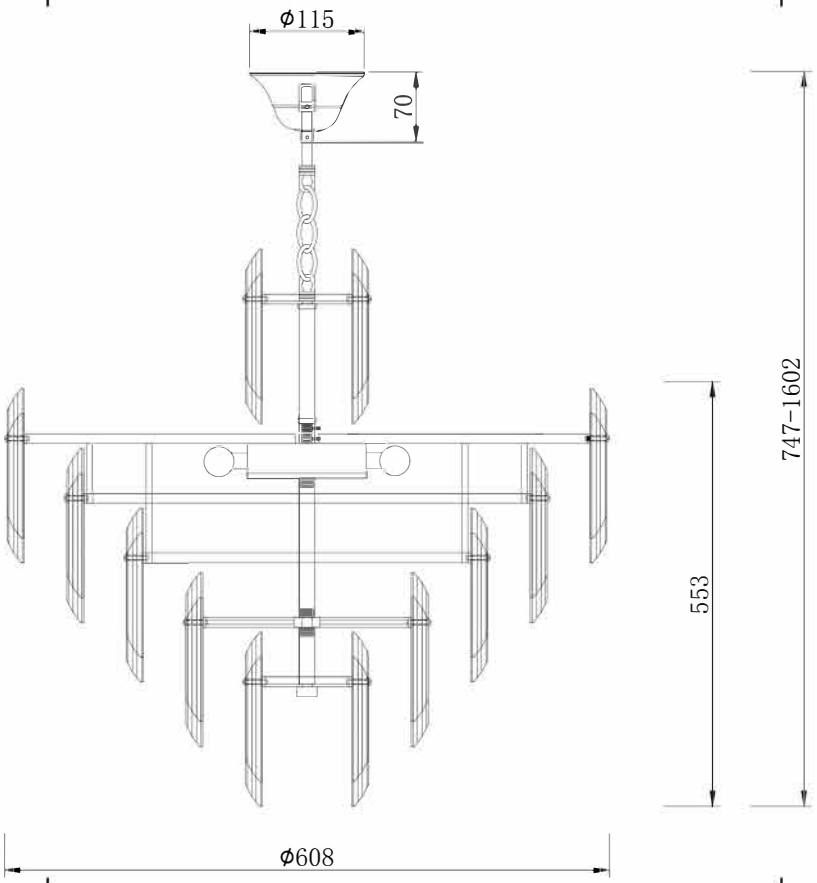

8xE14 40W

Model: DIA200PL-08G
Collection: Neoclassic
Series: Flare
Pendant Lamps