MAYTONI
DECORATIVE LIGHTING

Instruction

MOD094CL-04G

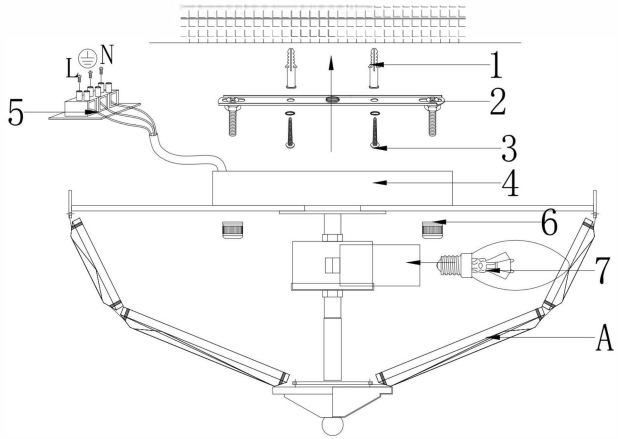

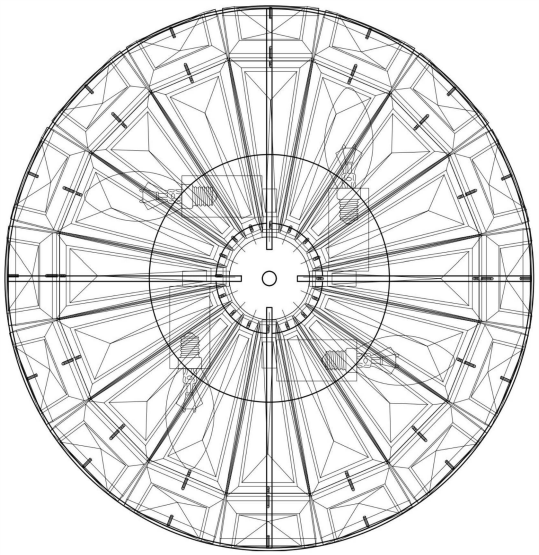

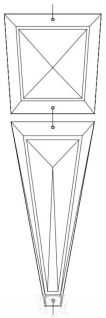

A=16

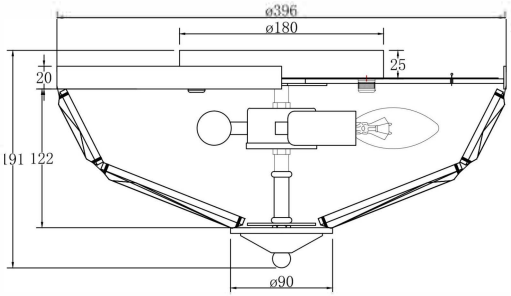

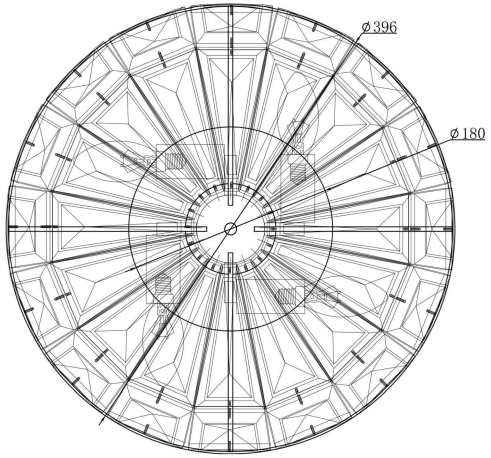

4xE14 60W

Model: MOD094CL-04G
Collection: Neoclassic
Series: Facet
Ceilling Lamps