MAYTONI
DECORATIVE LIGHTING

Instruction

DIA005WL-02G

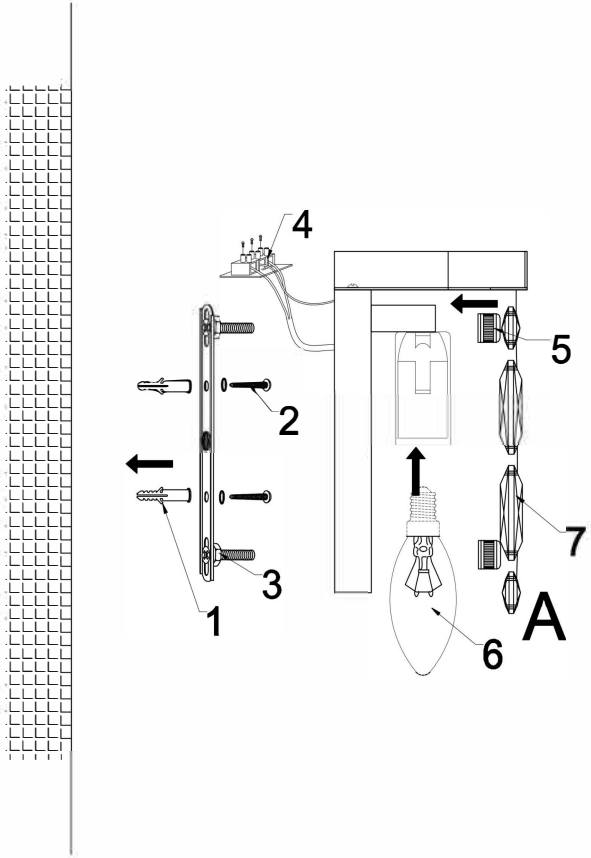

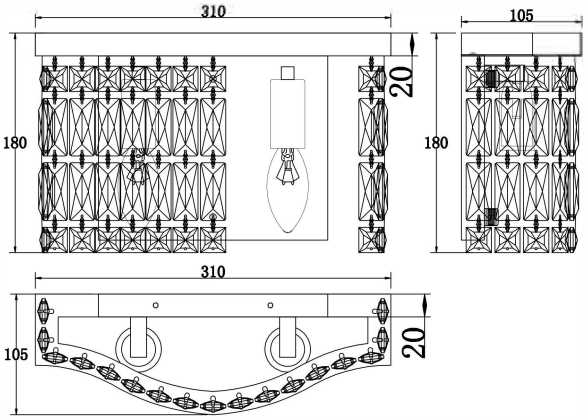

2xE14 60W

Model: DIA005WL-02G
Collection: Modern
Series: Dune
Wall Lamps