MAYTONI
DECORATIVE LIGHTING

Instruction

MOD547WL-09CH

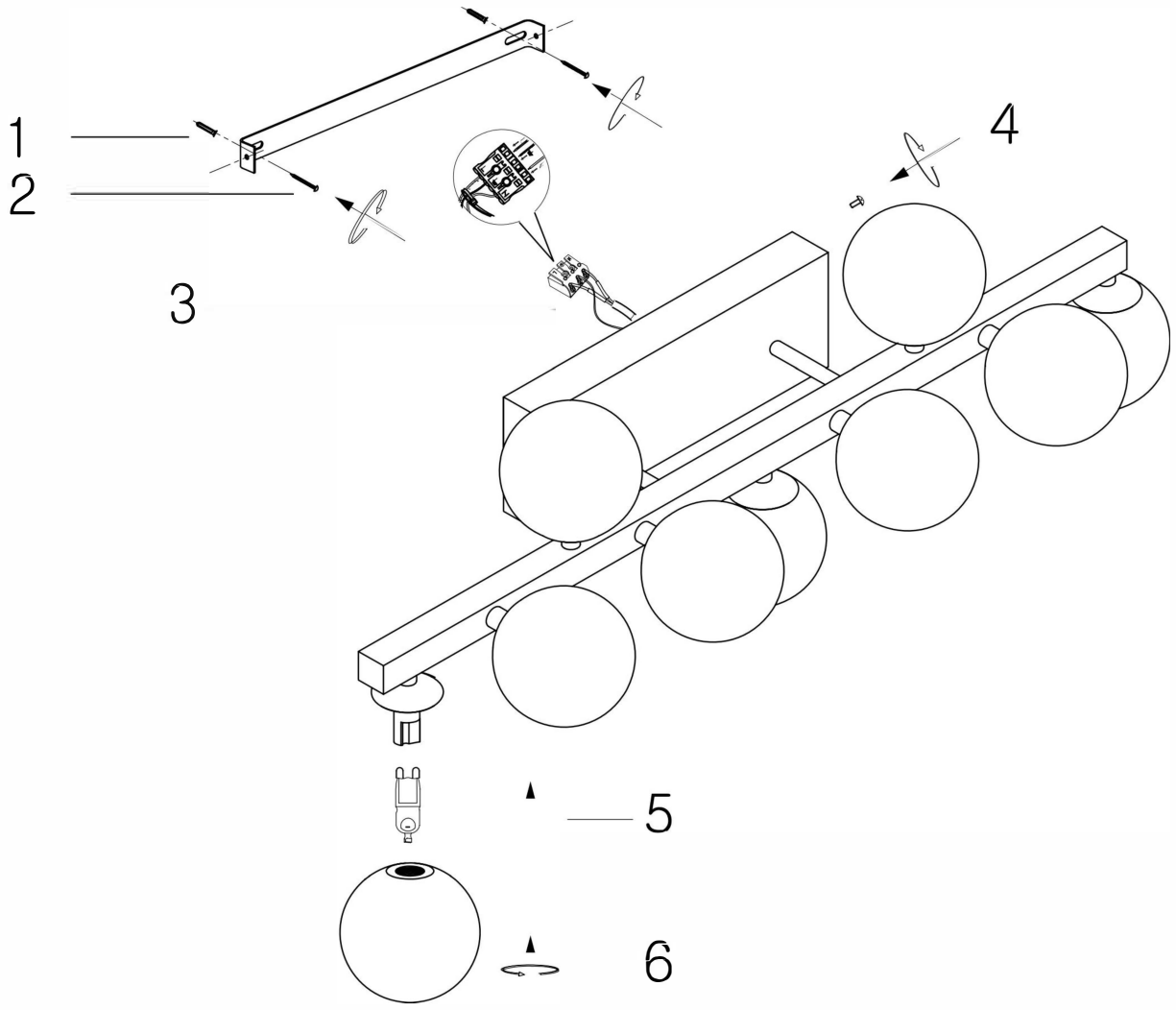

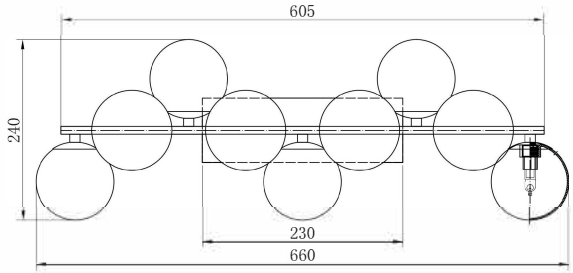

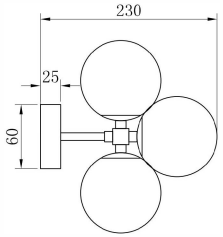

9xG9 28W

Model: MOD547WL-09CH
Collection: Modern
Series: Dallas
Wall Lamps