MAYTONI
DECORATIVE LIGHTING

Instruction

MOD545PL-11CH

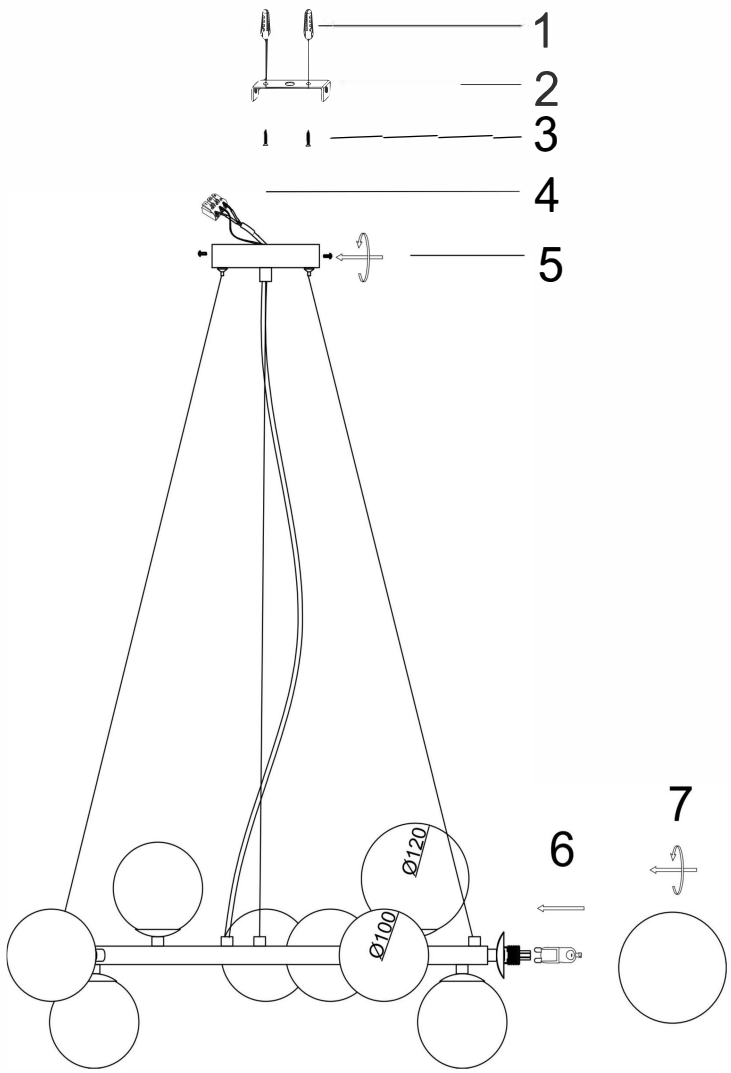

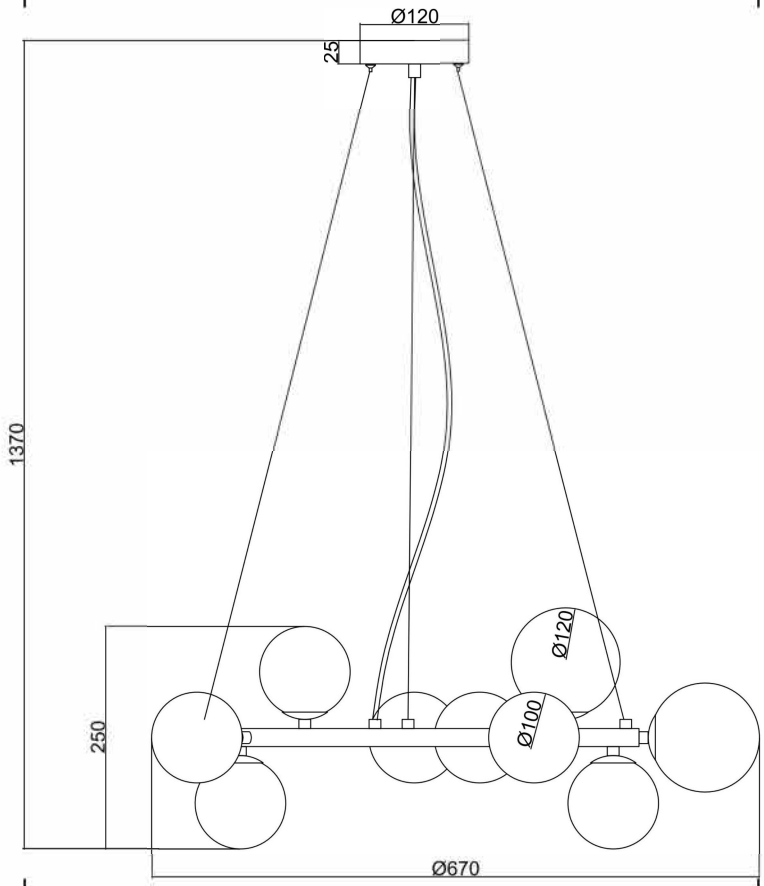

11xG9 28W

Model: MOD545PL-11CH
Collection: Modern
Series: Dallas
Pendant Lamps