MAYTONI
DECORATIVE LIGHTING

Instruction

C041WL-L3B3K

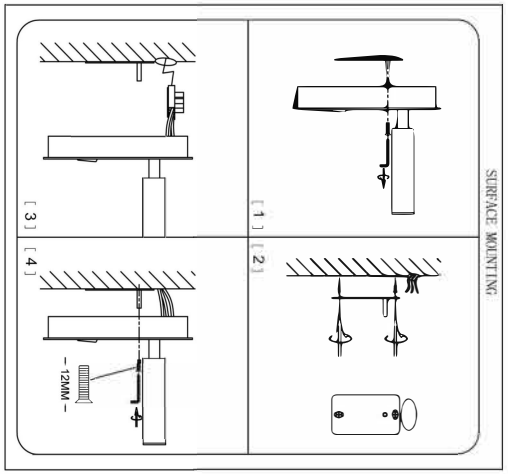

C041WL

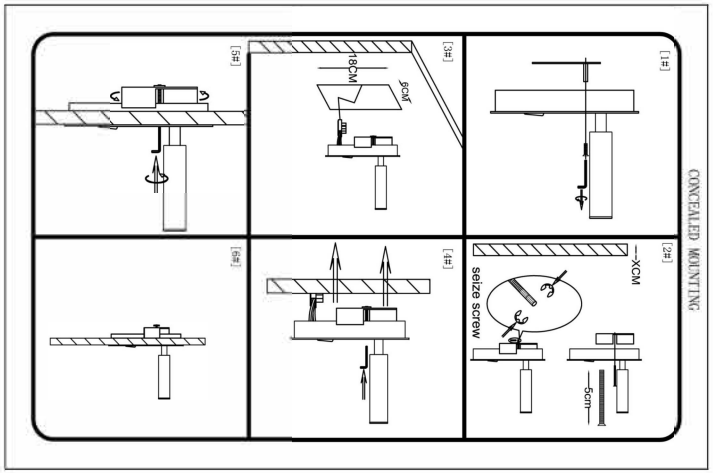

Recessed mounting

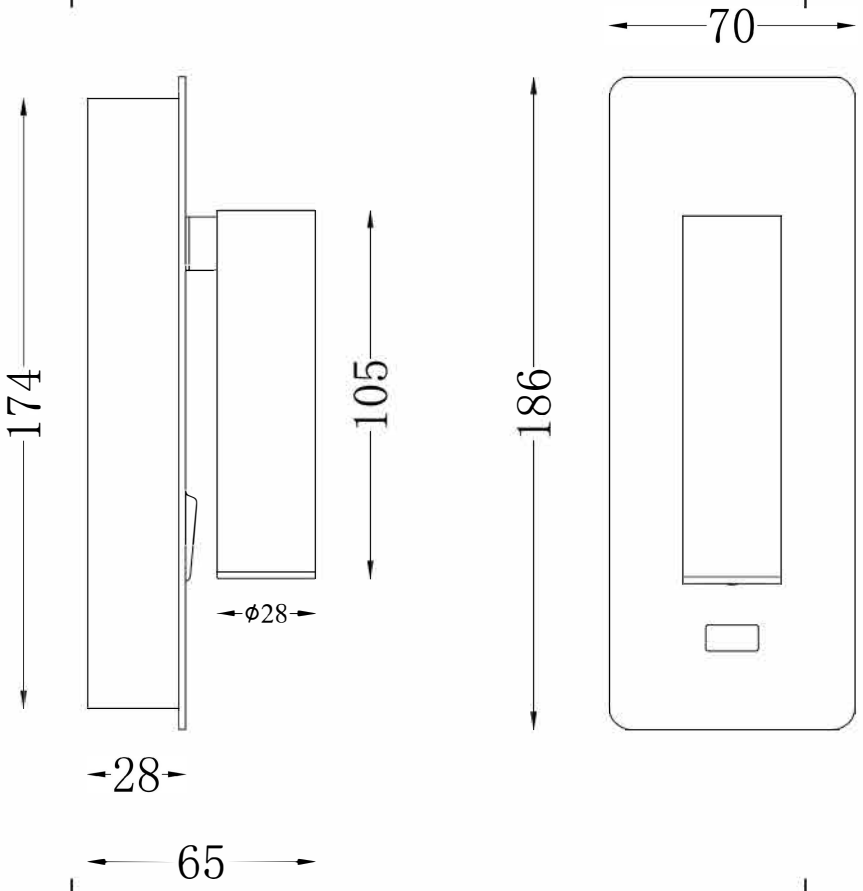

LED

MAX 3W
200 Lumen

Model: C041WL-L3B3K
Collection: Wall
Series: Mirax
Wall Lamps

This product contains a light source of the energy efficiency class F