MAYTONI
DECORATIVE LIGHTING

Instruction

O598WL-01B1

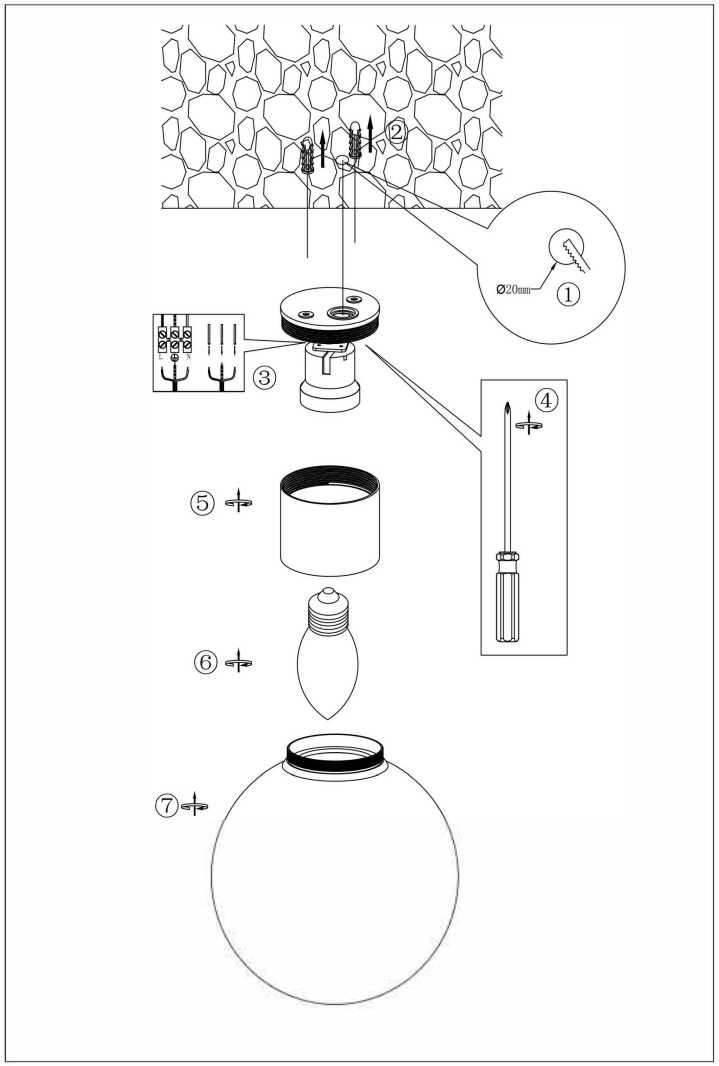

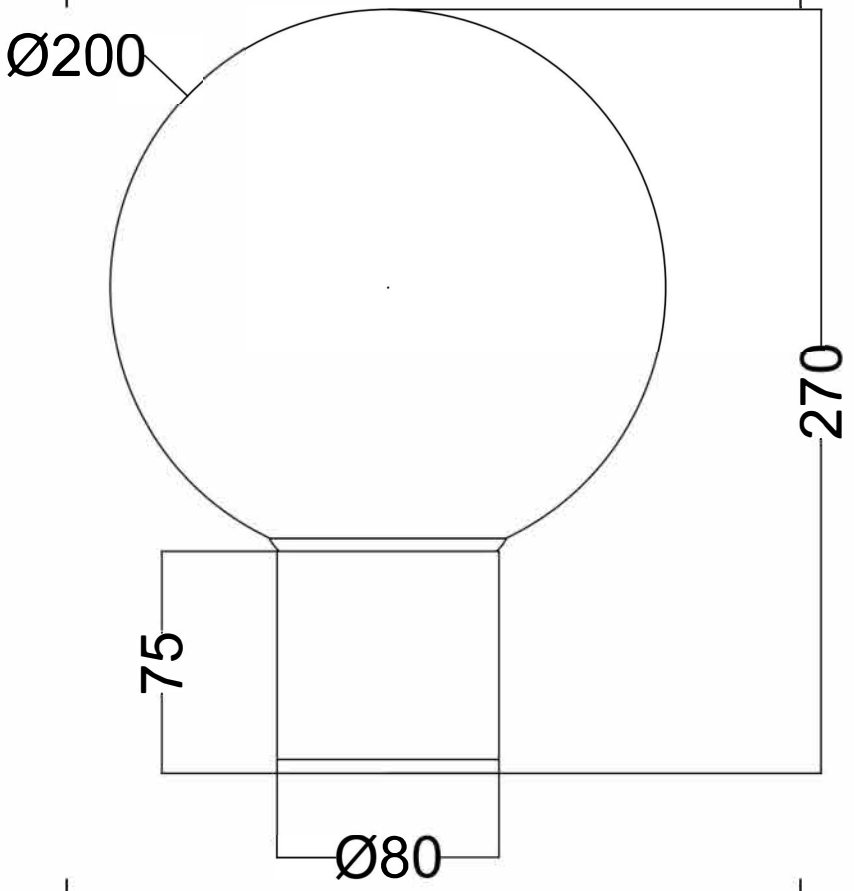

1xE27 60W

Model: O598WL-01B1
Collection: Outdoor
Series: Bold
Wall Lamps