MAYTONI
DECORATIVE LIGHTING

Instruction

MOD461WL-L5W3K

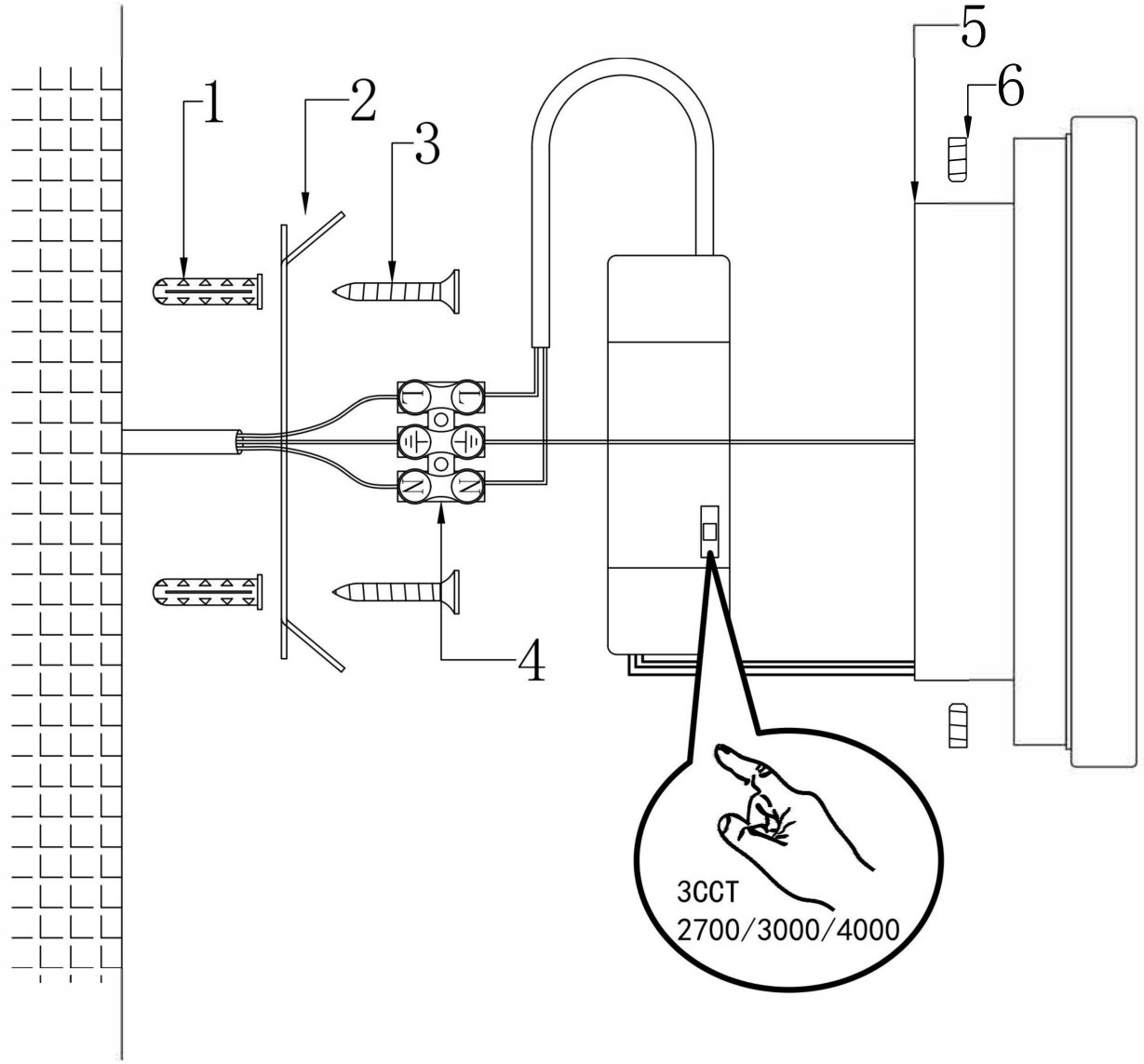

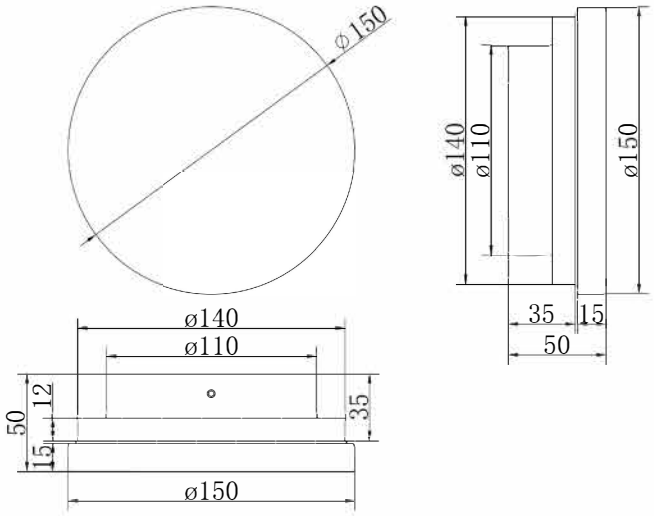

LED

MAX 5W
300 Lumen

Model: MOD461WL-L5W3K
Collection: Modern
Series: Basic Texture
Wall Lamps

This product contains a light source of the energy efficiency class F