MAYTONI
DECORATIVE LIGHTING

Instruction
MOD167PL-01GR

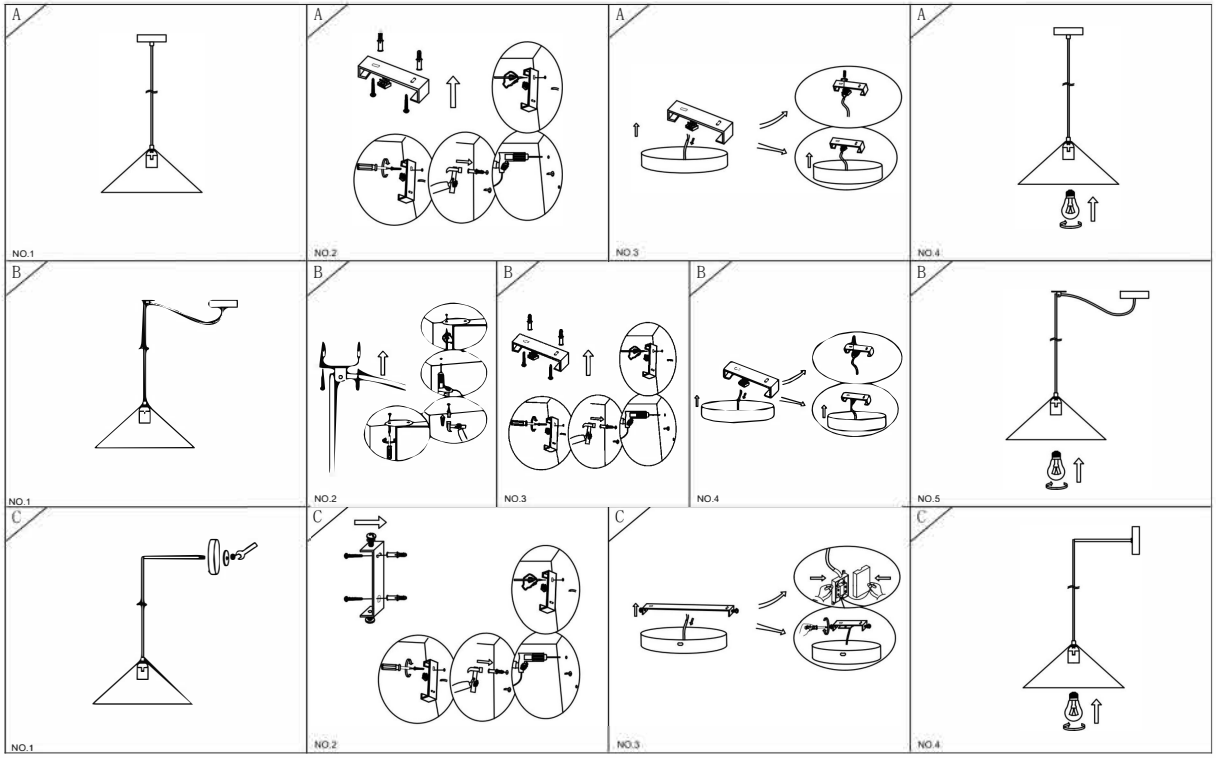

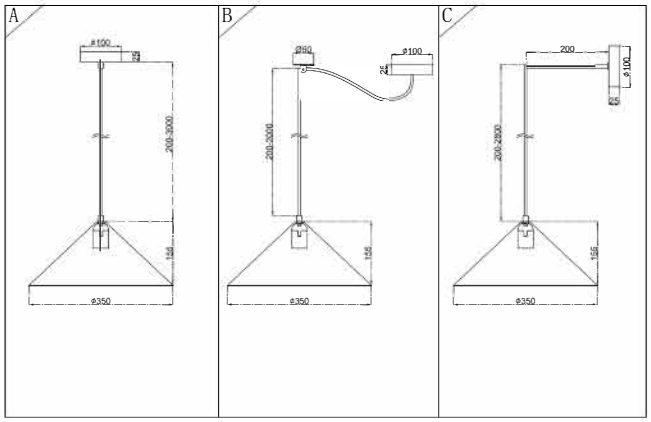

1xE27 40W

Model: MOD167PL-01GR
Collection: Modern
Series: Basic colors
Pendant Lamps