MAYTONI
DECORATIVE LIGHTING

Instruction
MOD419WL-01G

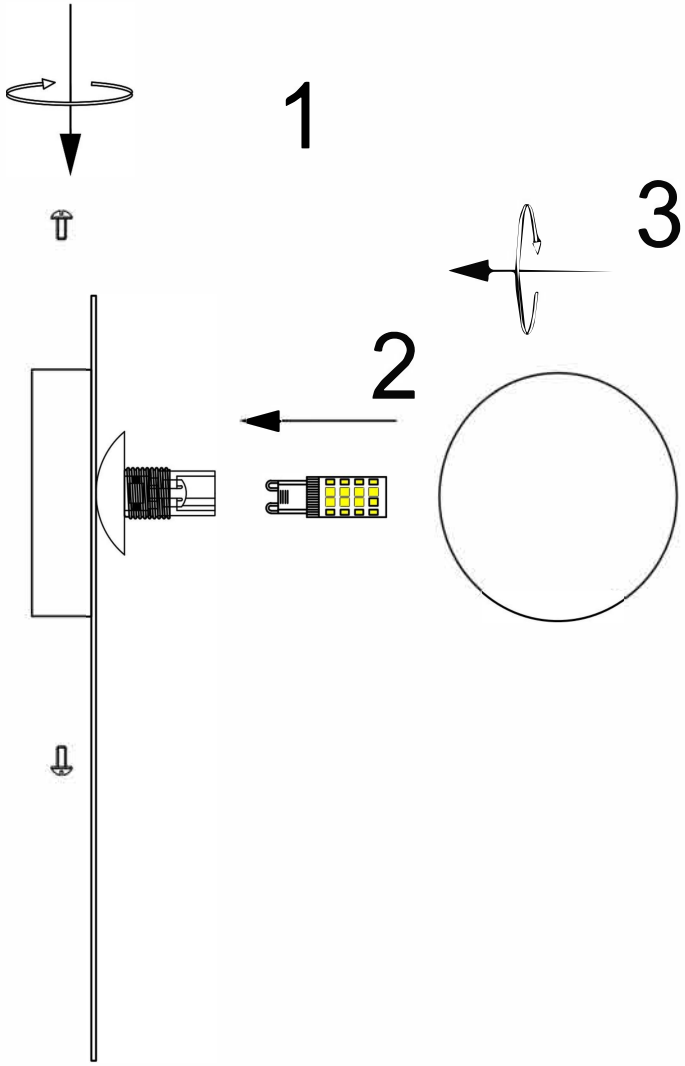

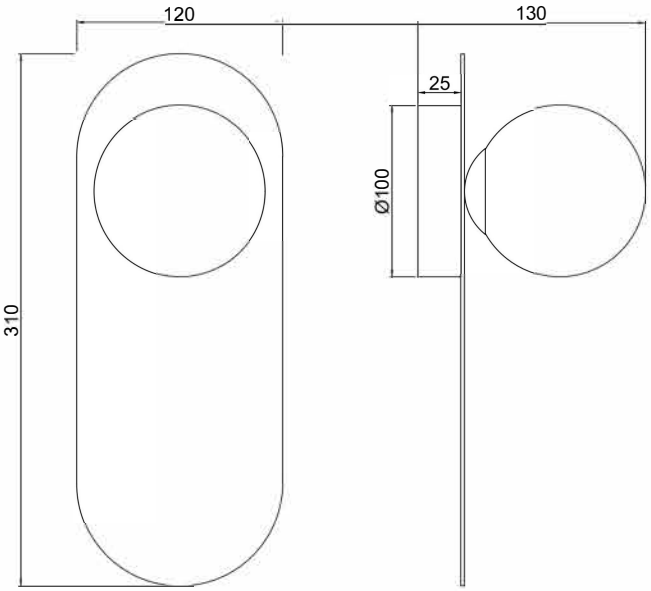

1xG9 28W

Model: MOD419WL-01G
Collection: Modern
Series: Bao
Wall Lamps