MAYTONI
DECORATIVE LIGHTING

Instruction

O021WL-L10B3K

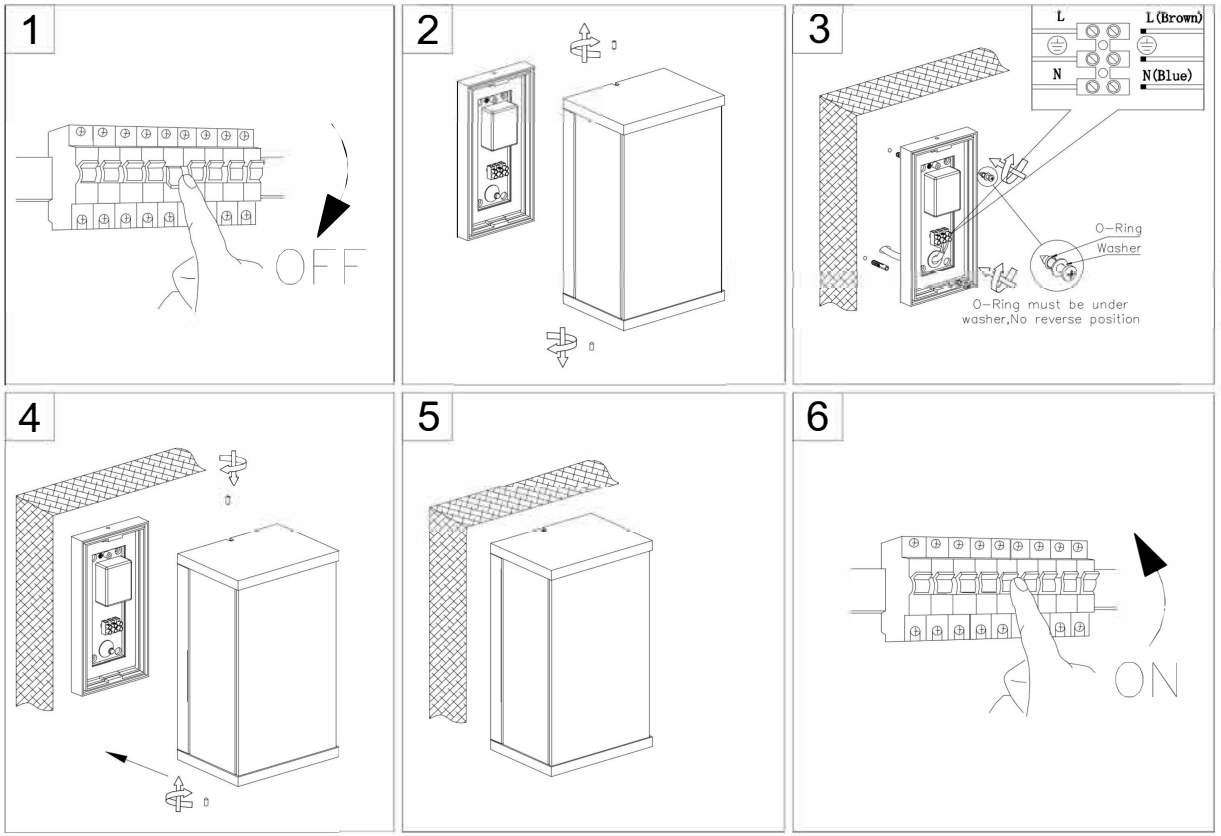

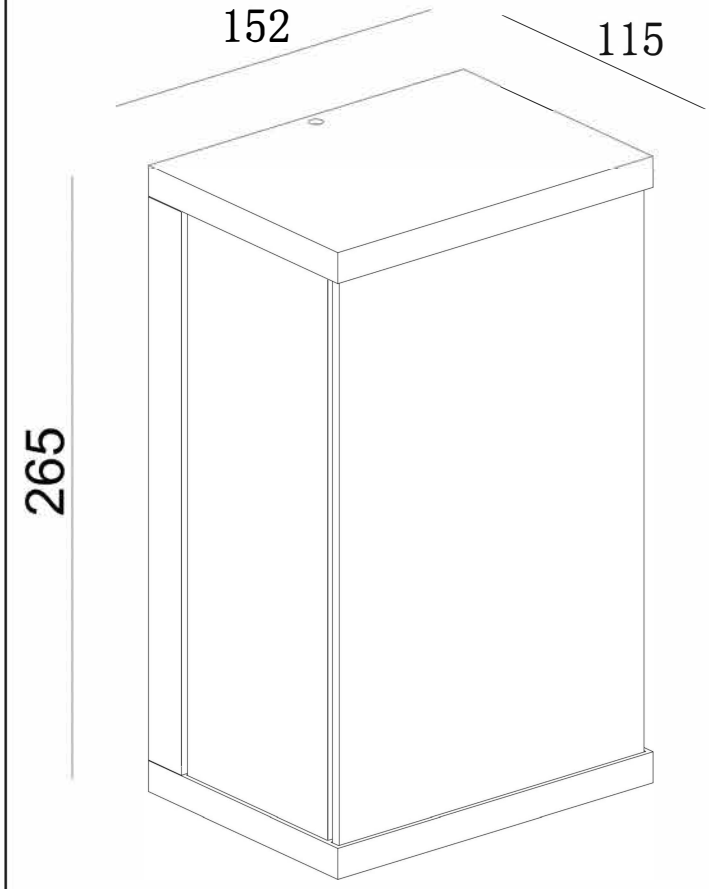

LED

MAX 10W
420 Lumen

Model: O021WL-L10B3K
Collection: Outdoor
Series: Baker Street
Wall Lamps

This product contains a light source of the energy efficiency class G