MAYTONI
DECORATIVE LIGHTING

Instruction

O021FL-L10B3K

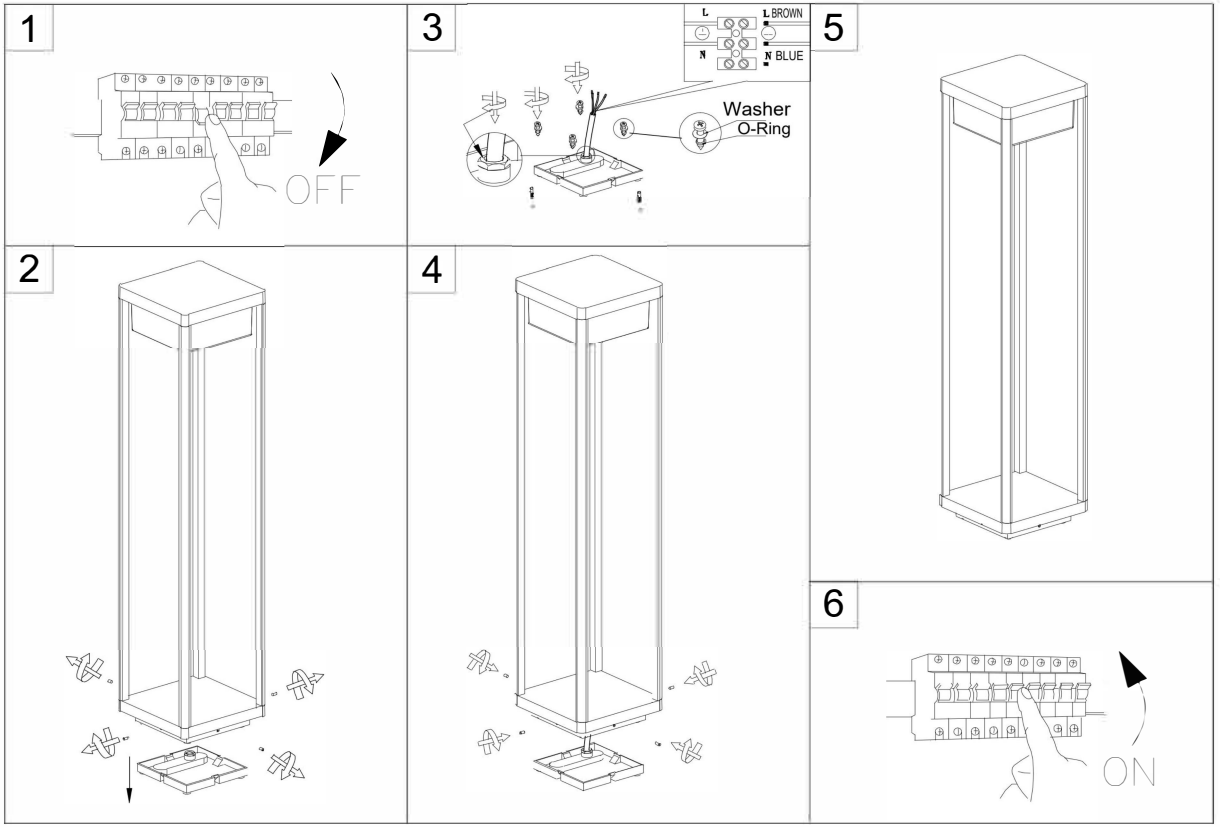

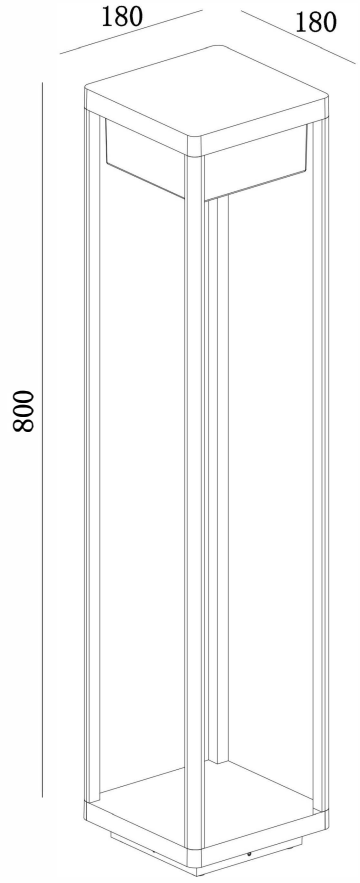

LED

MAX 10W
520 Lumen

Model: O021FL-L10B3K
Collection: Outdoor
Series: Baker Street
Landschaftslampe

This product contains a light source of the energy efficiency class G