MAYTONI
DECORATIVE LIGHTING

Instruction

C080WL-02-GU10-B

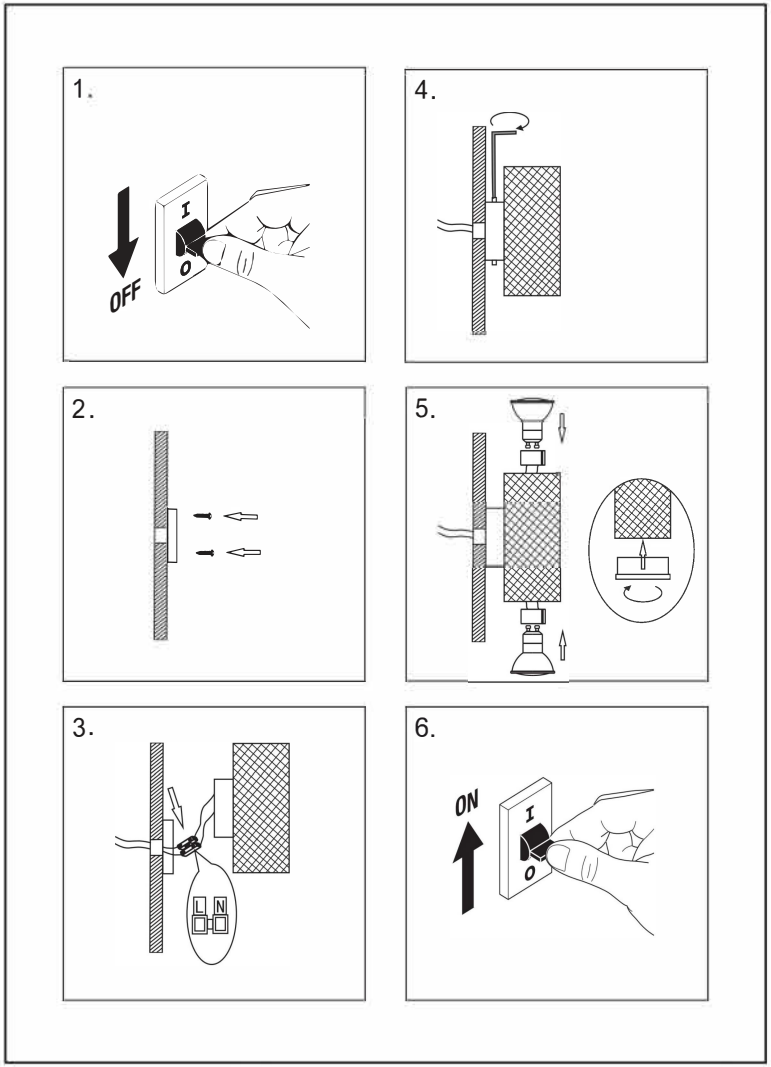

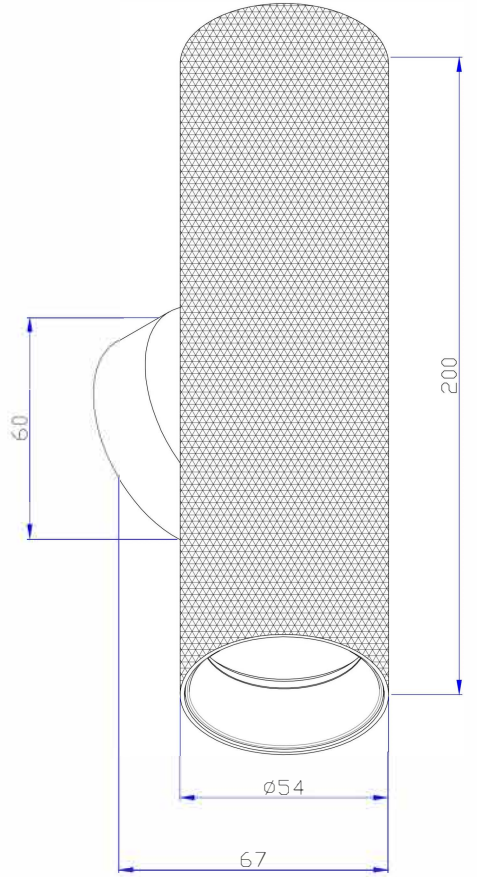

2xGU10 10W

Model: C080WL-02-GU10-B
Collection: Wall
Series: Artisan
Wall Lamps